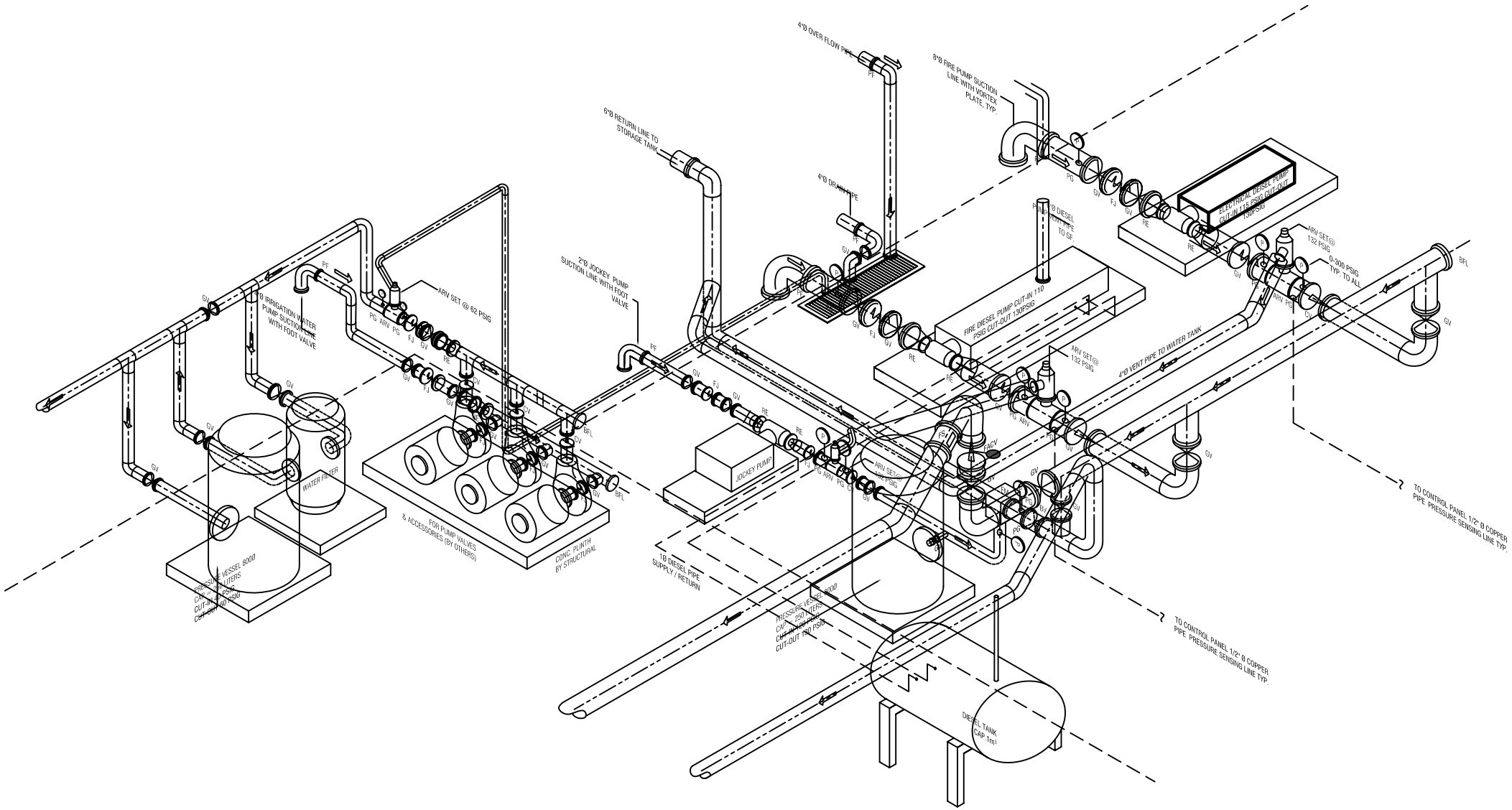

PUMP ROOM DETAILS

ISOMETRIC

NOT TO SCALE